ISOspec® DAVEY

DIESEL POWERED PUMP SETS

DEPEND ON DAVEY

WATER PRODUCTS

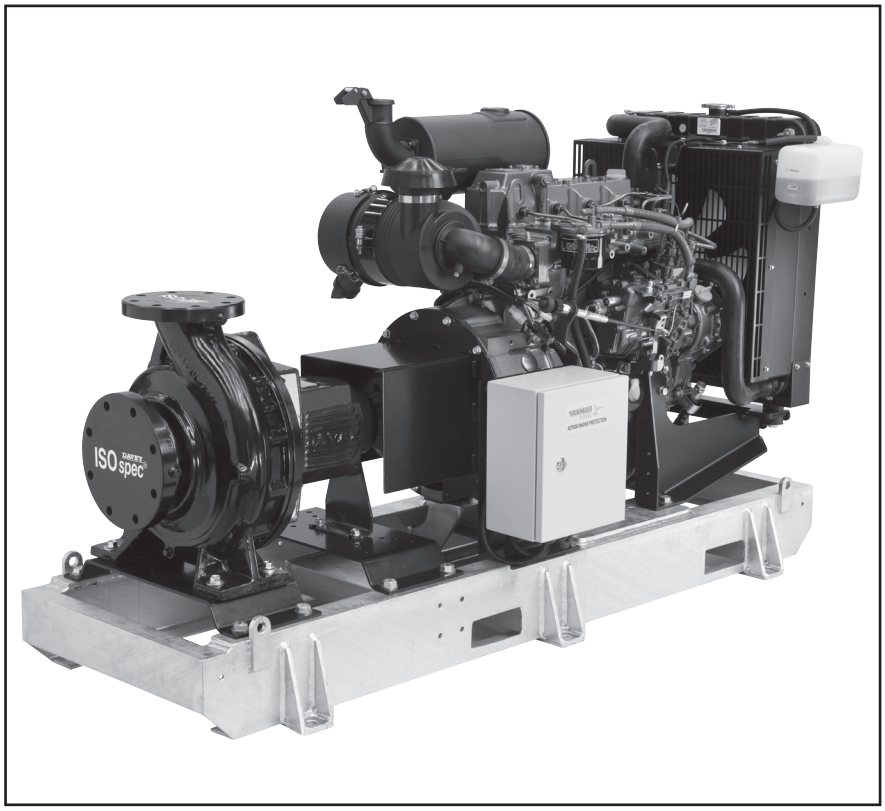

COMMERCIAL PUMP SYSTEMS

PRODUCT DESCRIPTION

A Davey ISOspec® CF (bareshaft) pump coupled to a diesel engine with either a manual or an automatic control box all mounted on a sturdy galvanised steel skid.

APPLICATIONS

- Irrigation
- Water supply
- Dewatering

FEATURES & BENEFITS

- Diesel irrigation packs include a Davey ISOspec CF pump, diesel engine and control box fully assembled on a sturdy galvanised steel base to allow for easy on site installation.
- Diesel irrigation packs come with a choice of quality Yanmar diesel engines for power requirements between 8kW and 56kW or JCB engines for higher power requirements between 54kW and 79kW
- All Yanmar and JCB diesel engines meet Australian off road particle emissions standards.
- Diesel irrigation packs come with a choice of manual (key start) control box or fully automatic (programmable time clock) control box in order to suit different applications.
- Control boxes are weather-proof making them suitable for outdoor applications.

Manual key start control panels include:
- Key starting
- Tachometer
- Manual speed control
- Up to 99 hour count down timer

Automatic control box includes:
- Automatic start and stop via 7 day 24 hour programmable timer
- Automatic control via an irrigation controller (volt free contacts)
- Automatic control via an external sensor (volt free contacts)
- Auxiliary stop (volt free contacts)
- Manual control with countdown timer
- LCD status display
- Manual speed control
- Digital hours run meter

- Both manual and automatic control boxes incorporate full engine protection which includes:
  - Low oil pressure
  - High engine water temperature
  - Low engine coolant level
  - Alternator or fan belt failure
  - High and low pump pressure
  - Zero or low RPM
  - Low battery voltage
  - Last out indicator
- Highly efficient cast iron pump casings are rated to 16 bar with flanges drilled to table E. Cast 316 stainless steel casings are available as an option.
- A single, high quality John Crane, or approved equivalent, mechanical seal with carbon versus ceramic hard faces is fitted as standard to all ISOspec pumps. Other seal options include silicon carbide versus silicon carbide.
- Convenient suction & discharge tappings allow for pressure gauges plus a volute drain is fitted as standard to all ISOspec series pumps.
- Back pull-out design allows for easy removal of the rotating element without disturbing the pipework or volute casing. This is proven to reduce downtime whilst performing routine maintenance.
- Re-usable casing o-rings in Nitrile for ease of pump re-assembly.

H/O & MFG SCORESBY Certified System ™ Quality ISO 9001

H/O & MFG SCORESBY Certified System ™ Environment ISO 14001

TECHNICAL SPECIFICATIONS

kW@... RPM (CONTINUOUS RATING)

To correctly match the ISOspec® pump selected to the correct Yanmar diesel, use the operating kilowatts, plus site de-rating of 20%, to arrive at the required continuous kilowatt rating.

Manuf.	Model/ Part no.	1500	1600	1800	2000	2200	2400	2600	2800	3000	Fuel Cons. @2200rpm Approx l/hr (100% load)
Yanmar	2TNV70-IP	-	-	-	5.4	6.0	6.6	7.1	7.6	8.2	1.4
Yanmar	3TNV70-IP	6.0	6.5	7.2	8.1	8.9	9.9	10.6	11.5	12.3	2
Yanmar	3TNV76-IP	8.1	8.8	9.6	10.6	11.9	12.9	13.9	15.0	16.1	2.7
Yanmar	3TNV82-IP	9.9	10.6	11.9	13.1	14.4	15.7	17.1	18.3	19.7	3
Yanmar	3TNV88-IP	12.1	12.9	14.7	16.2	18.1	19.4	21.1	22.7	24.4	3.7
Yanmar	3TNV84T-IP	14.2	14.5	16.9	21.5	22.0	22.5	24.1	26.2	-	4.5
Yanmar	4TNV88-IP	16.2	17.7	19.4	21.7	23.8	25.9	28.1	30.3	32.0	4.9
Yanmar	4TNV84T-IP	19.2	20.8	24.2	25.1	27.4	30.1	32.1	34.7	37.0	5.5
Yanmar	4TNV98-IP	29.3	33.0	37.0	35.7	41.0	44.3	46.0*	-	-	8
Yanmar	4TNV98T-IP	37.7	41.1	45.3	45.6	49.9	54.2	56.2*	-	-	10

*@MAX 2500rpm

Manuf.	Model/ Part no.	1000	1100	1200	1300	1400	1500	1600	1700	1800	1900	2000	2100	2200	Fuel Cons. @2200rpm Approx l/hr (100% load)
JCB	444-NA-IP	29	33	36	39	42	44	46	49	51	52	53	54	55	16.9
JCB	444-TC-IP	38	42	47	51	55	59	60	61	62	67	63	65	64	20.1
JCB	444-TCA1-IP	38	45	49	54	58	62	65	68	70	75	72	73	72	24.8
JCB	444-TCA2-IP	45	53	59	62	68	72	73	76	77	83	79	80	80	24.7

All power ratings are in kilowatts. To convert to horsepower, multiply by 1.341:- 1 horsepower (hp) = 0.7457 kilowatts (kW).

PUMP OPERATING LIMITS

Flow to	450m³/hr
Maximum total head	160m
Liquid temperature	1 to 95°C
Operating pressure (casing)	16 bar
Maximum speed	Refer to ISOspec® technical datasheet Ref: DPM158-1
Direction of rotation	Counter clockwise (suction end)

MATERIALS OF CONSTRUCTION

PART	MATERIAL
PUMP	
Pump casing	Cast Iron (GG25)
Impeller	Bronze (LG2)
Wear rings	Bronze (LG2)
Bearing frame	Cast Iron (GG20)
Pump shaft	420 stainless steel
Mechanical seal	Carbon/ceramic
Bearings	Ball/greased for life
Casing oring	Nitrile
BASE	
Drive coupling	Flexible "tyre"
Coupling guard	Carbon steel fabricated/painted
Baseplate	Carbon steel fabricated/galvanised

MOUNTING

Davey irrigation packs are designed to be secured and bolted to a suitably reinforced concrete base. For optimum performance, position the pump set on the concrete reinforced base and align using a spirit level on the pump discharge nozzle. Always shim the base appropriately at all mounting points located on the pump base. Uniformly tighten all securing bolts. For full details please refer to the relevant diesel engine's manufacturer's operating manual.

USAGE GUIDE

These diesel powered pumps are intended for permanent applications with the use of long range fuel tanks.
In the fuel tank and system it is important to incorporate a sufficient water trap and vent and level indicator, to reduce the likelihood of under performance.
Care must be taken to ensure the operator is fully briefed on safe operation of these pump units, especially regarding engine maintenance requirements (refer to manufacturer's operating manuals).

TECHNICAL SPECIFICATIONS

CONTROL PANELS

All Yanmar and JCB diesels come with a choice of manual (key start) control box or fully automatic (programmable time clock) control box in order to suit different applications.

Note: Applications such as automatic irrigation and frost protection require automatic control boxes.

EC150

MANUAL CONTROL BOX

NOTE: With a manual control box the diesel engine can only be **started manually**, requiring a person to be present to turn the ignition key.

Yanmar EC150: manual control box is weather-proof and incorporates an LCD status display and 99 hour count down timer to enable the diesel to run for a pre-set period of time.

MANUAL CONTROL BOX		
	Feature	**EC150**
Cabinet	Weather Proof Cabinet	Y
Control	LCD Status Display	Y
	Tachometer	Y
	Manual Speed Control (throttle lever)	Y
	Count Down Timer	Y
Engine Protection	Low Oil Pressure	Y
	High Engine Water Temperature	Y
	Loss of Coolant	Y
	Fan Belt Failure	Y
	High/Low Pump Pressure	Y
	Battery Voltage	Y
	First Out Indicator	Y
	Pump Pressure	Y

AUTOMATIC CONTROL BOX

NOTE: For automatic starting (i.e. programmable starts and stops) the diesel engine will need to be fitted with an automatic control box.

Yanmar ACP200: automatic control box is weather-proof and incorporates a 7 day, 24 hour programmable timer, remote starting, auxiliary stop, manual override and LCD status display.

AUTOMATIC CONTROL BOX		
	Feature	**ACP200**
Cabinet	Weather Proof Cabinet	Y
Control	7 Day 24 Hour Programmable Timer	Y
	Remote Starting (volt free contacts)	Y
	Auxiliary Stop (volt free contacts)	Y
	Manual Override	Y
	Tachometer	Y
	Manual Speed Control (throttle lever)	Y
	Digital Hour Meter	Y
Engine Protection	Low Oil Pressure	Y
	High Engine Water Temperature	Y
	Loss of Coolant	Y
	Fan Belt Failure	Y
	High/Low Pump Pressure	Y
	Battery Voltage	Y
	First Out Indicator	Y
	Pump Pressure	Y

TECHNICAL SPECIFICATIONS

DIMENSIONS

Manuf.	Model/ Part no.	A	B	C*	D	E	F	PTO Shaft	Weight (kg)	Shipping Volume (m^3)
Yanmar	2TNV70-IP	1800	660	849	160	207	150	40 X 80	307	1.01
Yanmar	3TNV70-IP	1800	660	849	160	207	150	40 X 80	325	1.01
Yanmar	3TNV76-IP	1800	660	859	160	207	150	40 X 80	333	1.02
Yanmar	3TNV82-IP	1800	660	893	160	233	150	40 X 80	353	1.06
Yanmar	3TNV84T-IP	1800	660	891	160	249	150	40 X 80	390	1.06
Yanmar	3TNV88-IP	1800	660	891	160	249	150	40 X 80	378	1.06
Yanmar	4TNV84T-IP	1800	660	891	160	249	150	40 X 80	405	1.06
Yanmar	4TNV88-IP	1800	660	891	160	249	150	40 X 80	396	1.06
Yanmar	4TNV98-IP	1800	660	1020	160	275	150	50 X 90	506	1.21
Yanmar	4TNV98T-IP	1800	660	1020	160	275	150	50 X 90	521	1.21
JCB	444-NA-IP	2300	1025	1066	220	260	150	50 x 116	824	2.51
JCB	444-TC-IP	2300	1025	1074	220	260	150	50 x 116	865	2.51
JCB	444-TCA1-IP	2300	1025	1066	220	260	150	50 x 116	860	2.51
JCB	444-TCA2-IP	2300	1025	1139	220	260	150	50 x 116	861	2.51

For irrigation packs with the ACP200 control panel, add 5kg to the total weight.
*Does not include exhaust system in height measurement (C).

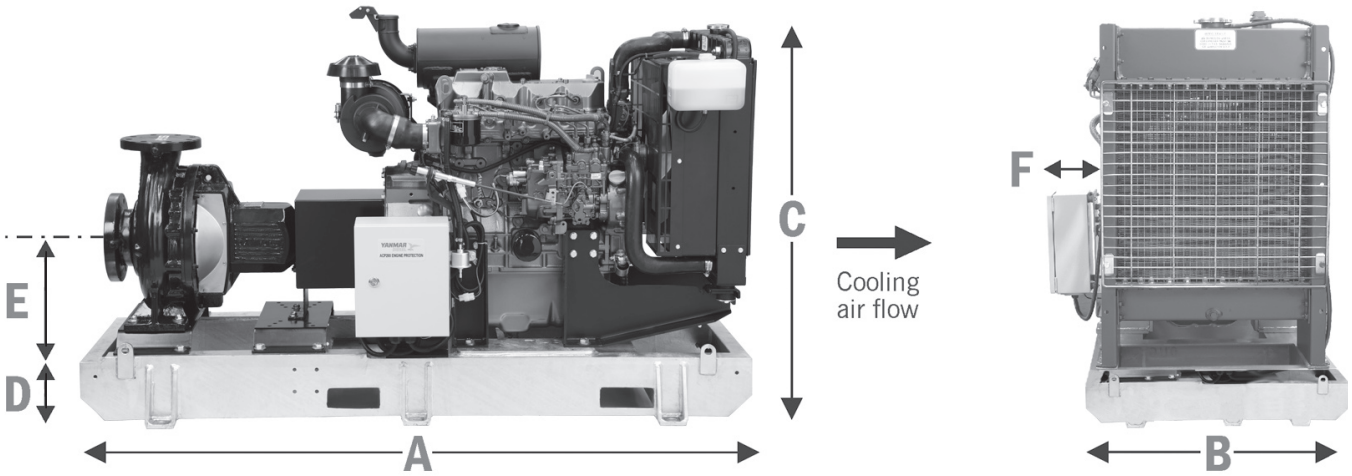

*Dimensions subject to change without notice. Shipping weight indicated does not include pump weight. This must be added accordingly.

YANMAR DIESEL IRRIGATION PACKS – MODEL TABLE

Manuf.	Model/ Part no.	Description	Emission Certif.	Control Box	Cylinders	Cooling	Maximum Continuous Power (kW)	Maximum Continuous Power (hp)	Minimum Speed (rpm)	Maximum Speed (rpm)	Fuel Cons. @ 2200rpm approx. l/hr (100% load)
Yanmar	2TNV70-IP	2TNV70 Diesel Irrigation Pack	Tier 2	EC150 - Manual Start	2	Water	8.2	11.0	1500	3000	1.4
Yanmar	3TNV70-IP	3TNV70 Diesel Irrigation Pack	Tier 2	EC150 - Manual Start	3	Water	12.3	16.5	1500	3000	2
Yanmar	3TNV76-IP	3TNV76 Diesel Irrigation Pack	Tier 2	EC150 - Manual Start	3	Water	16.1	21.6	1500	3000	2.7
Yanmar	3TNV82-IP	3TNV82 Diesel Irrigation Pack	Tier 2	EC150 - Manual Start	3	Water	19.8	26.6	1500	3000	3
Yanmar	3TNV88-IP	3TNV88 Diesel Irrigation Pack	Tier 2	EC150 - Manual Start	3	Water	24.4	32.7	1500	3000	3.7
Yanmar	3TNV84T-IP	3TNV84T Diesel Irrigation Pack	Tier 2	EC150 - Manual Start	3	Water	27.8	37.3	1500	3000	4.5
Yanmar	4TNV88-IP	4TNV88 Diesel Irrigation Pack	Tier 2	EC150 - Manual Start	4	Water	31.9	42.8	1500	3000	4.9
Yanmar	4TNV84-T-IP	4TNV84T Diesel Irrigation Pack	Tier 2	EC150 - Manual Start	4	Water	37.1	49.8	1500	3000	5.5
Yanmar	4TNV98-IP	4TNV98 Diesel Irrigation Pack	Tier 2	EC150 - Manual Start	4	Water	46.0	61.7	1500	2500	8
Yanmar	4TNV98T-IP	4TNV98T Diesel Irrigation Pack	Tier 2	EC150 - Manual Start	4	Water	56.2	75.4	1500	2500	10
JCB	444-NA-IP	444-NA Diesel Irrigation Pack	Tier 2	EC150 - Manual Start	4	Water	54	73	1000	2200	16.9
JCB	444-TC-IP	444-TC Diesel Irrigation Pack	Tier 2	EC150 - Manual Start	4	Water	63	86	1000	2200	20.1
JCB	444-TCA1-IP	444-TCA1 Diesel Irrigation Pack	Tier 3	EC150 - Manual Start	4	Water	72	96	1000	2200	24.8
JCB	444-TCA2-IP	444-TCA2 Diesel Irrigation Pack	Tier 2	EC150 - Manual Start	4	Water	79	107	1000	2200	24.7
Yanmar	2TNV70-IP-ACP	2TNV70 Diesel Irrigation Pack w/ACP200	Tier 2	ACP200 - Auto Start	2	Water	8.2	11.0	1500	3000	1.4
Yanmar	3TNV70-IP-ACP	3TNV70 Diesel Irrigation Pack w/ACP200	Tier 2	ACP200 - Auto Start	3	Water	12.3	16.5	1500	3000	2
Yanmar	3TNV76-IP-ACP	3TNV76 Diesel Irrigation Pack w/ACP200	Tier 2	ACP200 - Auto Start	3	Water	16.1	21.6	1500	3000	2.7
Yanmar	3TNV82-IP-ACP	3TNV82 Diesel Irrigation Pack w/ACP200	Tier 2	ACP200 - Auto Start	3	Water	19.8	26.6	1500	3000	3
Yanmar	3TNV88-IP-ACP	3TNV88 Diesel Irrigation Pack w/ACP200	Tier 2	ACP200 - Auto Start	3	Water	24.4	32.7	1500	3000	3.7
Yanmar	3TNV84T-IP-ACP	3TNV84T Diesel Irrigation Pack w/ACP200	Tier 2	ACP200 - Auto Start	3	Water	27.8	37.3	1500	3000	4.5
Yanmar	4TNV88-IP-ACP	4TNV88 Diesel Irrigation Pack w/ACP200	Tier 2	ACP200 - Auto Start	4	Water	31.9	42.8	1500	3000	4.9
Yanmar	4TNV84T-IP-ACP	4TNV84T Diesel Irrigation Pack w/ACP200	Tier 2	ACP200 - Auto Start	4	Water	37.1	49.8	1500	3000	5.5
Yanmar	4TNV98-IP-ACP	4TNV98 Diesel Irrigation Pack w/ACP200	Tier 2	ACP200 - Auto Start	4	Water	46.0	61.7	1500	2500	8
Yanmar	4TNV98T-IP-ACP	4TNV98T Diesel Irrigation Pack w/ACP200	Tier 2	ACP200 - Auto Start	4	Water	56.2	75.4	1500	2500	10
JCB	444-NA-IP-ACP	444-NA Diesel Irrigation Pack w/ACP200	Tier 2	ACP200 - Auto Start	4	Water	54	73	1000	2200	16.9
JCB	444-TC-IP-ACP	444-TC Diesel Irrigation Pack w/ACP200	Tier 2	ACP200 - Auto Start	4	Water	63	86	1000	2200	20.1
JCB	444-TCA1-IP-ACP	444-TCA1 Diesel Irrigation Pack w/ACP200	Tier 3	ACP200 - Auto Start	4	Water	72	96	1000	2200	24.8
JCB	444-TCA2-IP-ACP	444-TCA2 Diesel Irrigation Pack w/ACP200	Tier 2	ACP200 - Auto Start	4	Water	79	107	1000	2200	24.7

ISOspec® BARESHAFT PUMP MODEL IDENTIFICATION

CF 125x100-250

- Nominal diameter of impeller (mm)
- Diameter of outlet (mm)
- Diameter of inlet (mm)
- Bareshaft pump (ISOspec® series)

The Davey ISOspec® Series is comprised of 29 standard sizes. Pumps with different impeller diameters and speeds are available to satisfy various performance ranges. Performance curves within this catalogue are in compliance with ISO2858 standards.

For full performance details, please refer to the ISOspec® Technical Reference Guide (DPM158-1) or contact your nearest Davey dealer.

ISOspec® technical information can also be downloaded from www.davey.com.au.

DEPEND ON DAVEY WATER PRODUCTS

Davey Water Products Pty Ltd
Member of the GUD Group
ABN 18 066 327 517

AUSTRALIA
Head Office and Manufacturing
6 Lakeview Drive,
Scoresby, Australia 3179
Ph: +61 3 9730 9222
Fax: +61 3 9753 4100
Website: davey.com.au

Customer Service Centre
Ph: 1300 369 100
Fax: 1300 369 119
E-mail: sales@davey.com.au

NEW ZEALAND
7 Rockridge Avenue,
Penrose, Auckland 1061
Ph: +64 9 570 9135
Fax: +64 9 527 7654
E-mail: sales@daveynz.co.nz
Website: daveynz.co.nz

Customer Service Centre
Ph: 0800 654 333

REST OF WORLD
6 Lakeview Drive,
Scoresby, Australia 3179
Ph: +61 3 9730 9121
Fax: +61 3 9753 4248
E-mail: export@davey.com.au
Website: davey.com.au

HQ & MFG SCORESBY Certified System Quality ISO 9001

HQ & MFG SCORESBY Certified System Environment ISO 14001

This literature is not a complete guide to product usage. Further information is available from your Davey dealer, Davey Customer Service Centre and from the relevant product Installation and Operating Instructions. This data sheet must be read in conjunction with the relevant product Installation and Operating Instructions and all applicable statutory requirements. Product specifications may change without notice.
® Davey and ISOspec are registered trademarks of Davey Products Pty Ltd. © Davey Products Pty Ltd 2010.

DPM169-2/2K/0910/IPM supersedes DPM169-1/2K/0705/SC